CO EMISSION REDUCTION OF A HRSG DUCT BURNER

by

Ferenc LEZSOVITS* *, *Sándor KÖNCZÖL, and Krisztián SZTANKÓ
Department of Energy Engineering, Budapest University of Technology and Economics, Budapest, Hungary

Original scientific paper
UDC: 621.18.:532.517.4
DOI: 10.2298/TSCI1003845L

A heat-recovery steam generator was erected after a gas-turbine with a duct burner into the district heat centre. After commissioning, the CO emissions were found to be above the acceptable level specified in the initial contract. The Department of Energy Engineering of the BME was asked for their expert contribution in solving the problem of reducing these CO emissions. This team investigated the factors that cause incomplete combustion: the flue-gas outlet of the gas-turbine has significant swirl and rotation, the diffuser in between the gas-turbine and heat-recovery steam generator is too short and has a large cone angle, the velocity of flue-gas entering the duct burner is greater than expected, and the outlet direction of the flammable mixture from the injector of the duct burner was not optimal.
After reducing the flow swirl of flue-gas and modifying the nozzle of the duct burner as suggested by the Department of Energy Engineering of the BME, CO emissions have been reduced to an acceptable level. The method involves the application of CFD modeling and studying images of the flames which proved to be very informative.

Key words: *duct burner, turbulence reduction, CO emission reduction*

Introduction

Gas turbines (GT) and heat-recovery steam generators (HRSG) are currently used in a wide range of power generation applications due to their high efficiency and positive effect on plant flexibility. A properly designed duct burner system can enhance that flexibility. A duct burner's performance is sensitive both to its internal structure and to the exhaust gas characteristics of the gas turbine. Duct burners use supplementary firing to increase the heat energy of a gas turbine's exhaust, making it possible to increase the output of a downstream (HRSG). Early systems took a conventional approach to burner design. The exhaust of the turbine was directed into a windbox and then into a burner throat, where fuel was added and mixed with oxygen using high-pressure drops and swirls. Simpler, grid-style systems were designed later, which aimed to reduce the pressure in order to keep the gas turbine operating near to optimal conditions. The grid design uses an array of fuel manifolds to deliver the fuel into the turbine's exhaust stream and a bluff body attachment to stabilize the flame. As gas turbine technology advanced, mass

* Corresponding author; e-mail: lezsovits@energia.bme.hu

flow rate and exhaust gas temperature decreased in parallel with the increase in combustion efficiency. The cross-sectional area of the HRSG was increased to make more tube surface area available for heat recovery and to keep exhaust pressures low enough to maintain the efficiency of the gas turbine.

At different loads, changes to the mass flow steps to the duct burner zone have an effect on the mixing energy at the burner as well as on the distribution profile of the exhaust gas of the gas turbine. To optimize the combustion process, both the burner fuel and turbine exhaust gas must be evenly distributed. Just as the burner runners are spread out over the duct's cross--section, so the flow profile of the TEG must be distributed evenly, too. Adjusting the duct configuration, the surface area of the upstream tube and the turning vanes, and adding distribution grids in the form of perforated plates are common methods of ensuring a uniform velocity profile in the gas flow entering the burner grid [1-4].

Description of the co-generation unit

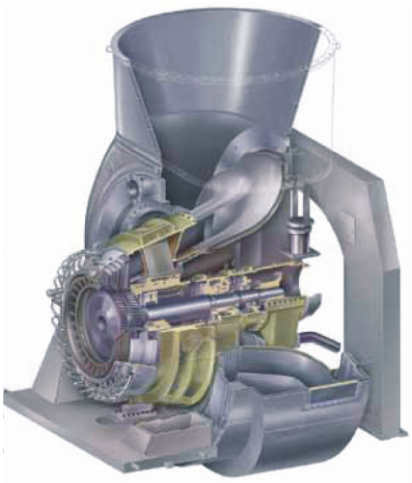

Figure 1. Exhaust-gas outlet section of the gas-turbine [5]

A combined gas-turbine and steam cycle based co-generation system was erected at a district heating centre. The gas-turbine employed was a Rolls-Royce RB 211, a two-shaft aero derivative type, composed of a gas-generator element and an RT61 power turbine. It is important to emphasize that the exhaust gas outlet and the connection to the HRSG is placed at a 90 degree angle to the flue-gas, since the alternator connection is at the exhaust end (see fig.1)

A HRSG with supplementary firing was erected, and the duct burner in between the GT and the HRSG was installed and commissioned. In order to attain a nearly uniform flue-gas velocity field in the duct burner zone, the application of a long diffuser is recommended, which can significantly reduce non-uniformity and swirls. This system lacks such a diffuser due to a lack of installation space. The turbine outlet is attached directly to the HRSG, using a short connecting element.

Main technical parameters at nominal load at the ambient temperature of 0 °C of the TBM-RB211-61 gas-turbine are [5]: power – 32.12 MW; heat rate – 9158 kJ/kWh; efficiency – 39.3%; pressure ratio – 21.5; power turbine speed – 4800 1/min.; exhaust gas temperature – 496 °C; exhaust gas mass flow – 100 kg/s; GT exhaust (TEG) analysis – O_2 13.86 vol.%, N_2 75.35 vol.%, Ar 0.91 vol.%, CO_2 3.22 vol.%, and H_2O 6.66 vol.%.

Due to the exhaust gas of the gas-turbine being at a 90 degree angle to the HRSG, the exhaust-gas flow shows significant swirls and rotation at the outlet cross-section of the gas turbine. These swirls are amplified further by the change in shape of the cross-section from circular to rectangular of the connecting piece.

The gas flow at the exit of the gas turbine has a characteristic, low velocity, central region surrounded by a rotating region adjacent to the wall where higher velocities prevail. The ro-

tation of the flow and its high velocity forces the flow outwards to the walls in the expansion section, in the manner of cyclones, resulting in uneven flow distribution in front of the burners.

Description of applied duct burners and their installation

For heat supply at peak load heat demand supplementary duct burners were installed. The main data of the duct burners applied are [6]: fuel data (average natural gas composition – methane 97.429 vol.%, ethane 1.028 vol%, propane 0.355 vol.%, N-butane 0.077 vol.%, I-butane 0.058 vol.%, N-pentane 0.011 vol.%, I-pentane 0.016 vol.%, hexane 0.004 vol.%, carbon dioxide 0.046 vol.%, and nitrogen 0.976 vol.%); maximal heat input – 23.0 MW; nominal heat input – 20.5 MW, number of burner groups – 1; number of burner lines – 4; turndown ratio (4 rows in operation) – >10 : 1; average flue gas temperature after supplementary firing (at t_{amb} = 0 °C) – 685 °C 40 °C; pressure in furnace (normal) – 30 mbar; emission – NO_x (10-100% load) < 45 mg/MJ, and CO (10-100% load) < 40 mg/MJ; conditions – the TEG velocity is not allowed to vary more than 20% of the average velocity and shall not exceed 24 m/s.

The duct burners applied are of the partially premixed type. Gaseous fuel coming from a gas supply tube through a cylindrical hole enters the injector tube. The gas in this tube is partially mixed with ambient flue-gas having an O_2 content of approximately 14% in order to ensure flame stability. The flame is formed on an injector tube having 4 holes of 7 mm diameter at an angle of 45 degrees. Nearly all of the gas supply holes have an eccentricity of more than 1 mm to the injector tube, which can be measured by means of a cone insert. From photographs taken at this point it can be concluded that the high speed gas fuel flow has a ramming effect at the injector inlet, and the flow partially by-passes the injector tube. A certain amount of fuel gas also streams below the wings. The pre-mixing effect in the injector tube occurs with very low excess air because of the comparatively small outlet hole diameter. Figure 2 shows the design and operating principles of the duct burner applied. Elementary burner installation in line forms the duct burner. In our case four duct burner lines were installed into the diffuser box in between the gas turbine and the HRSG. Photographs of the duct burners installed can be seen in fig. 3.

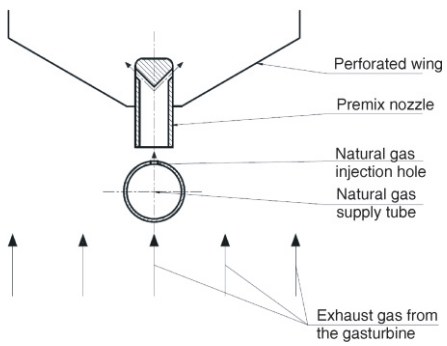

Figure 2. Design and operating principles of the applied duct burner [6]

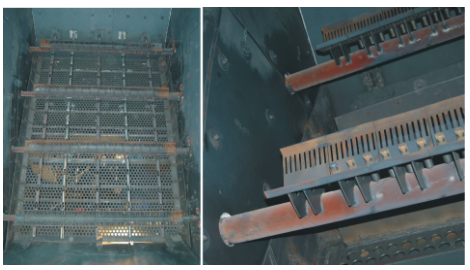

Figure 3. Photos of installed duct burners (color image see on our web site)

CFD simulation method and results

To predict the operational conditions of the duct burners, preliminary CFD simulations were performed (Commercial flow solver CFX 5.6 was used for the calculations). The formulation

of the mathematical model was based on the analysis given in several published sources [7-11]. A coupled unstructured solver was used for the calculations. The gas flow was assumed to be a: 3 dimensional, incompressible, steady state and isothermal flow of an ideal gas with a temperature of 781 K and a density of 0.45 kg/m^3, based on the data supplied by the gas turbine supplier [5]. The standard RNG *k*-epsilon model was used for the turbulent equations closure, together with a scalable wall model in the boundary layer. Higher order differencing schemes were used for the equations and all calculations were done at double precision. Tetrahedral cells were used in the main domain except at the walls, where inflated boundaries were used in order to resolve the boundary layer. A finer mesh was used at the inlet to the duct and around the burner plane.

Due to the flow profile of the exhaust gas from the gas turbine it was predicted that there would be an uneven flow distribution at the burner location (figs. 4 and 5). It is necessary to equalize the flow for proper burner operation. The problem is more one of equalizing the flow than of distributing the flow in a certain direction. The most obvious solution is a distribution grid, achieved by means of a perforated plate at a certain distance in front of the burner plane. Due to the relatively high dynamic pressure of the exhaust gas a relatively high pressure drop is

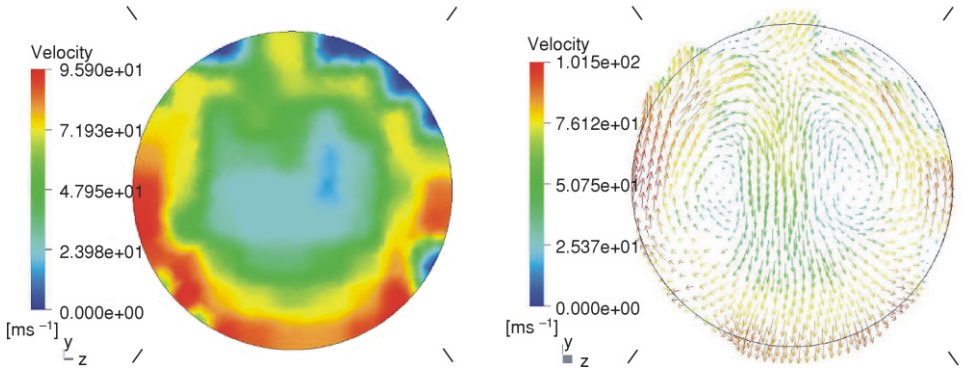

Figure 4. Flue-gas velocity distribution at the outlet of the gas-turbine (color image see on our web site)

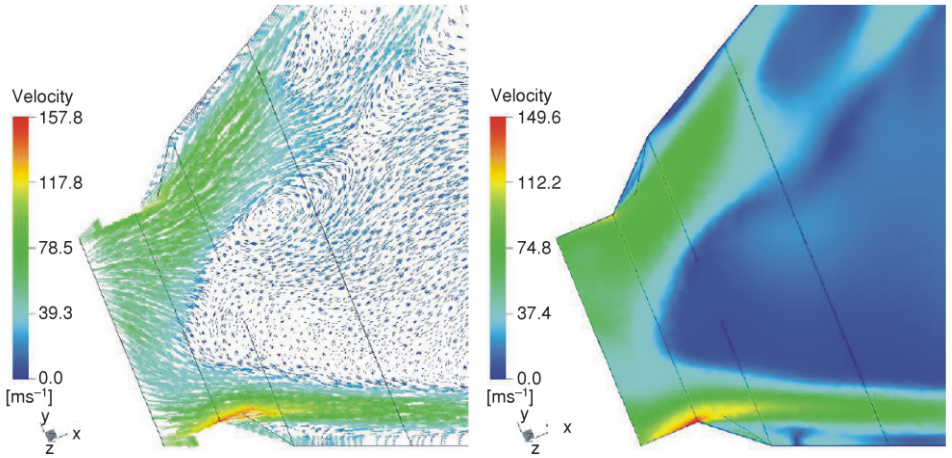

Figure 5. Flue-gas velocity distribution in the diffuser without application flow equalizers (color image see on our web site)

also required in the resistance grid in order to equalize the unconformity of flow. Three calculations were carried out at 3 different resistances in the perforated plate. The resistance corresponds to three pressure resistances, at 200 Pa, 400 Pa, and 550 Pa. The result of the calculation without any resistance in the perforated plate is included for comparison. The perforated plate is not included in the CFD calculations as having many small holes. This approach would require an excessively high number of small computational nodes and consequently an extremely long computational time. Instead the perforated plate is included as a pressure resistant area.

The pressure resistance is included as a pressure resistance coefficient in the calculation, which is proportional to the square of the velocity. An acceptable flow distribution at the burner location was achieved by the use of a resistance grid with a resistance of 550 Pa. High flow angles in the range –37° to 33° were also predicted, however. This section shows the results of a calculation with a 550 Pa resistance grid and flow straightening plates. The results obtained with a 550 Pa grid without flow straightening plates are included for comparison. A number of different configurations were investigated, where the number of flow straightening plates and their locations were adjusted.

Figure 6 shows a cross-sectional drawing of the flue-gas duct and duct burner with the steel-plate mesh installed (fig. 7), and the results of a CFD model of this arrangement. The results of the simulation show that swirls are reduced significantly, but that the velocity field was still not uniform enough. The velocity of flue-gas at the zone of duct burners even exceeded the given limit (24 m/s) for this duct burner in most cases. Even the average velocity at nominal load in this cross-section is slightly larger than the permitted value.

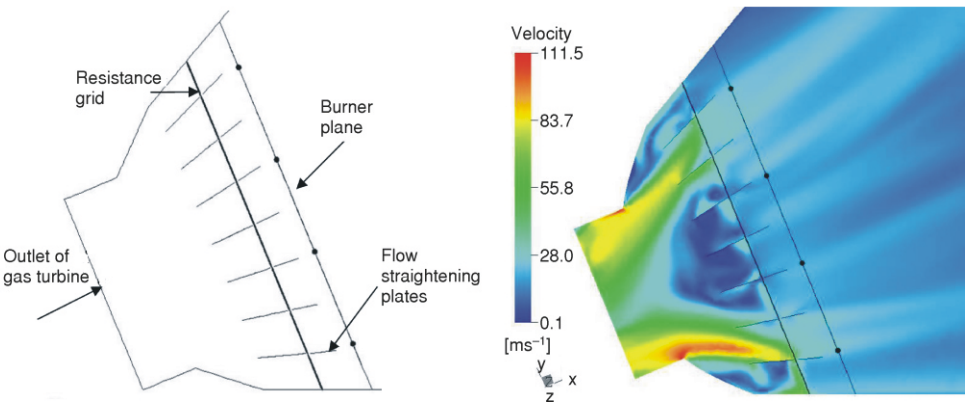

Figure 6. Cross-sectional drawing of flue-gas duct and results of the CFD simulation (color image see on our web site)

Instrumentation, measurement techniques and operational experience

An exhaust gas sample was taken after the HRSG via an isokinetic sampling probe in order to determine the average exhaust gas mixture. The measurement of the emission was performed according to ISO11042 and EN50379 standards. The CO content of the exhaust gas was measured by volume in ppm units by means of an infrared sensor based apparatus.

The duct burners cannot be operated independently of the gas-turbine. The gas-turbine was thus first of all tested on its own, without the operation of duct burners. The CO emission in

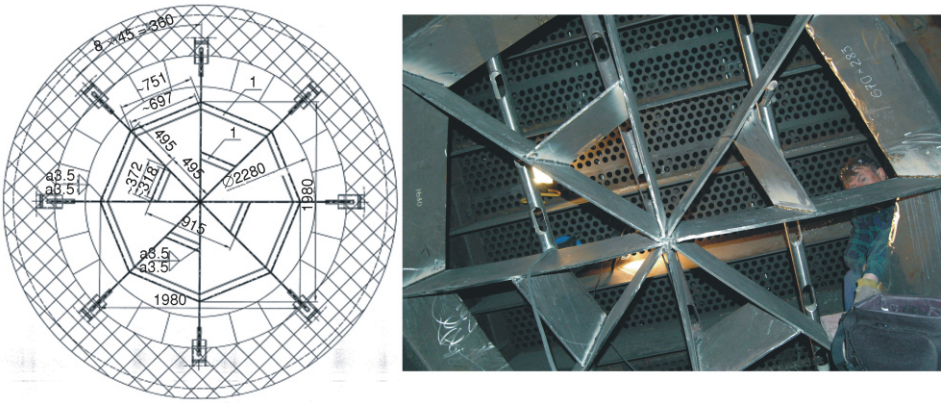

Figure 7. Initially applied plate mesh for turbulence reduction (color image see on our web site)

this mode was measured at about 3 mg/m^3, which is less than the 5 mg/m^3 preliminary given value. Subsequently the duct burner lines were tested both separately and operating together. When all burners were operated together the CO content of the exhaust gas reached a value of 90 mg/m^3. This means that a CO emission of 90 – 3 = 87 mg/m^3 was produced by the duct burners.

Taking into account the exhaust gas flow and burner capacity, the CO emissions were found to be significantly above the acceptable level (more than 300 mg/MJ) for duct burner operation. A perforated steel plate with 40 mm diameter holes, covering the total cross-section, and plates of a spider mesh form were installed to reduce large swirls. CO emission was reduced by about 20% following this intervention, although it still did not reach an acceptably low level, and remained several times higher than the pre-determined limit specified in the contract (40 mg/MJ).

Investigations and amendments suggested by the BME

The increasing efficiency of modern gas-turbines has led to a reduction in the temperature and oxygen content of their exhaust gases. This causes deterioration in the combustion conditions in the exhaust gas. It reduces the flame temperature and the stability region of the flame. These factors may increase the level of CO and of other unburnt particles. To keep CO and in parallel NO_x emission at a low level, the following factors have to be taken into account:

– CO formation depends to a large degree on reaction kinetics and turbulence,
– CO formation happens when there is incomplete combustion caused by lower flame temperatures,
– to reduce CO and unburnt hydrocarbon emissions two conditions must be fulfilled: the retention time of flames has to be increased in the recirculation zone of the burner wings and turbulence has to be reduced in order to separate comparatively cool exhaust gas from the flame,
– besides reducing turbulence, average flow velocity also has to be kept at a moderate level,
– fluid flow must have an even velocity distribution with little turbulence and has to be more or less perpendicular to the burner axis, and

– the spontaneous ignition temperature of CO combustion in case of a stoichiometric concentration is 609 °C, and at other concentrations it is even higher; the exhaust gas temperature of the gas-turbine is over 100 ºC lower than this.

Backflow swirl is normally formed behind the burner wings, ensuring stable and perfect combustion. When disturbed exhaust gas flow with high turbulence arrives at the duct burner, high turbulence periodically destroys normal backflow swirls, and fuel which has not been totally combusted can reach the lower temperature zone, where further combustion conditions for CO oxidation are much worse. When the direction of the exhaust flow is not perpendicular to the burner axis, backflow swirl will be asymmetrical, or flow away, which can cause blow off.

Gas flow at the burner nozzle exit is affected by drops in pressure. When a pressure drop reaches a critical value, the exit flow will reach sonic velocity. In the case of larger pressure drops the exit velocity will not increase further but remains constant. In such cases a further pressure reduction occurs, due to shock waves. Shock wave formation can cause a situation where a certain amount of fuel gas by-passes the mixing tube, which can lead to abnormal combustion and the formation of CO. Since the exit pressure is fixed, the pressure drop is determined by the inlet pressure of the gaseous fuel. Increasing the inlet pressure will also increase the density of the fuel. When a pressure drop reaches a critical value its velocity will not increase further, but fuel mass flow will increase due to the increase in density.

Previously obtained results were evaluated and an injector tube sample was tested in the laboratory using high pressure methane. It was observed from this test that the methane-air mixture flow from the outlet of the injector was not symmetrical.

Examination of photographs of the flames confirmed that a certain amount of natural gas got behind the wings due to jet collisions. This natural gas spreads around and reaches locations where the excess air factor is high and the ambient exhaust gas temperature is not high enough for complete combustion. At the end of duct burners the opposite situation prevails. Natural gas below and above the wings reached an area where the exhaust gas velocity is low, or even where recirculation occurs. In this area the excess air factor could be below one and a lack of oxygen results in soot formation in this area. Damage could be observed at the pilot burner of the 1st duct burner which may have been caused by flame impact, in addition to a soot layer caused by gas combustion with insufficient air. Two temperature sensors were installed in front of the HRSG inlet. The range of temperatures recorded by these sensors showed a difference of 100 ºC, which was a result of the lack of proper mixture formation and some luminous flame formation. It was suggested that the inlet fuel gas pressure be reduced in order to avoid shock wave formation. In parallel, the nozzle diameter should be increased so as to keep burner capacity at the same level. The perforated plates and spider mesh shaped damper installed initially did not achieve the expected reduction of CO emissions. It was surmised that an appropriate flow field can be attained only in the region of the duct burners, because of the higher than permitted average exhaust gas velocity. In order to reduce the swirls in flue gas flow further, a denser (200 200 mm) zig-zag mesh installation was suggested. It was also important to reduce the mesh size of the damper, because free jet velocity and turbulence is reduced when the distance from the mesh is greater than 20 times the average diameter ($L/D > 20$). Besides the zig-zag mesh it was recommended that perforated plates having 5 mm diameter holes and a 40% hole ratio be installed in the zone around the duct burners. Flue-gas flow can be reduced at the zone of the duct burners by means of these perforated plates and gas flow velocity can be

higher between the plates. This design allows the problems caused by high average velocity to be avoided. Figure 8 shows a cutaway drawing of the suggested installations.

A preliminary CFD simulation was performed for the suggested application. The results of this simulation show significant reduction in velocity in the zone of burners and higher velocity in between burners. Figure 9 shows the results of a CFD simulation of this situation.

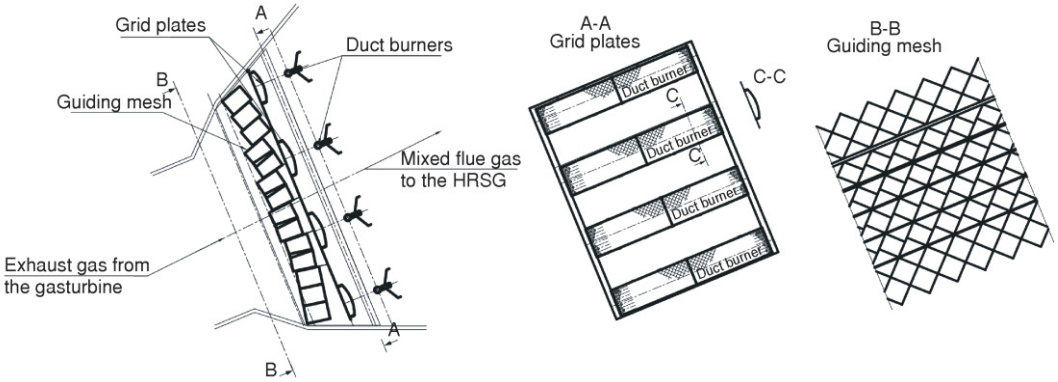

Figure 8. Cutaway drawing of suggested installations by BME

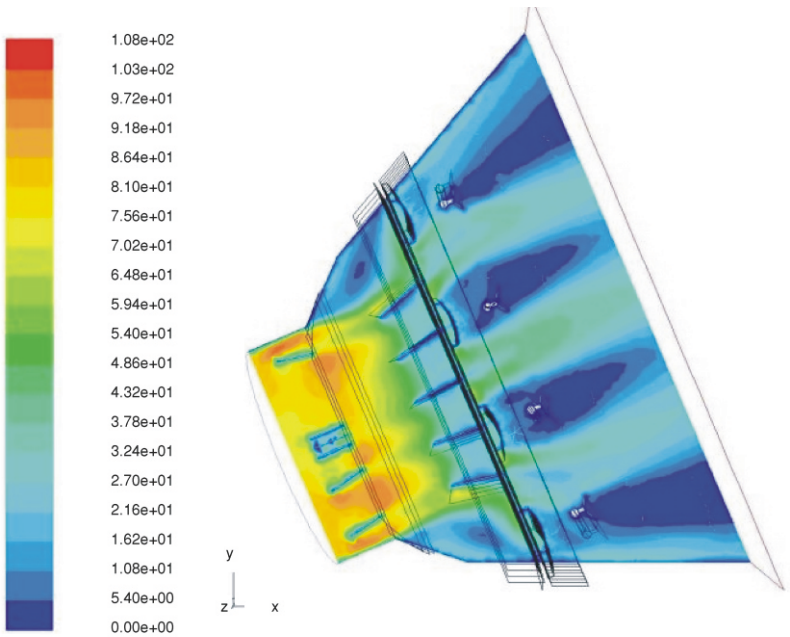

Figure 9. Results of CFD simulation of suggested installations by BME (color image see on our web site)

At the same time it was recommended that pressure sensors be installed for each burner to allow gas pressure to be measured at each burner inlet. It is possible to adjust burner capacity separately by means of manual valves. This solution made it possible to reduce burner capacity where CO production was high and increase the capacity of the burner where CO production was lower.

Operational experience after amendments suggested by the BME

Perforated plates were installed below burners as suggested. In parallel asymmetrical outflow from the injectors was achieved by means of injector modification, which redirects these flows ahead. Ignition thus became much more stable. Periodical fluctuations of the flames and drifting around were no longer experienced. Temperature sensors installed in front of the HRSG inlet showed nearly the same value, the difference being less than 20 ºC. This could be the result of more uniform mixture formation and less luminous flame.

The operation of the duct burners was followed visually through observation windows and by means of videos and photos. Figure 10 shows photographs of the flame of a duct burner before and after the reconstructions. Before the reconstruction the frames of the burners at the bottom and at the top positions were luminous and pulsating. The burners in the middle were not as luminous, but pulsated even more, with periodic extinction. After the installation of perforated plates below the burners in the middle the situation improved significantly.

After these changes the expected result was achieved, and CO emission was reduced to below the preliminary limit of 40 mg/MJ specified in the contract.

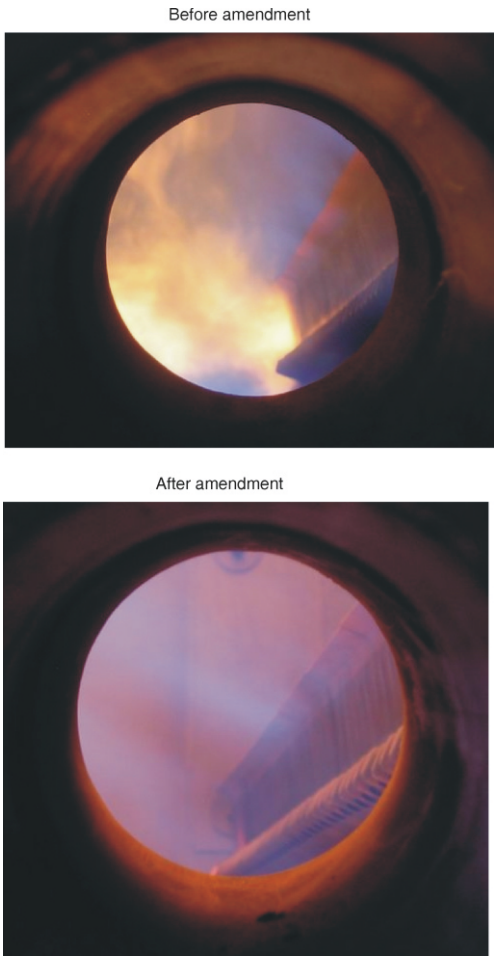

Figure 10. Picture of flame before and after amendment (color image see on our web site)

Conclusions

The Department of Energy Engineering of the BME was commissioned to carry out theoretical and experimental investigations of gas-turbine HRSG duct burners whose CO emissions exceeded 200 mg/MJ. It was ascertained that the main cause of the problem was the high velocity and turbulence of exhaust gas at the gas-turbine exit. On the basis of the CFD calculations and experiments meshes and perforated plates were installed below the burners in order to reduce the ve-

locity and turbulence of exhaust gas locally at the burners. The parallel injectors of the burners were modified in order to redirect the outlet flow. Furthermore the inlet pressure levels of the burners were readjusted. By means of these measures and modifications the CO emission was reduced to a level lower than the preliminary limit specified in the contract (40 mg/MJ).

References

[1] Catalano, L. A., *et al.*,Thermal Design and Emissions of Duct-Burners for Combined-Cycle and Cogenerative Plants, *International Journal of Environmental Technology and Management, 7* (2007), 1-2, pp. 165-177
[2] Catalano, L. A., *et al*., Efficient Design Optimization of Duct-Burners for Combined-Cycle and Cogenerative Plants Engineering Optimization, *38* (2006) , 7, pp. 801-820
[3] Baukal, Ch. E., Jr., Heat Transfer in Industrial Combustion, Industrial Burners Handbook (Industrial Combustion), John Zink Co. LLC, Tulsa, Okla., USA, 2003, ISBN: 9780849313868
[4] Backlund, J. C., Bergmans, S. C. G., Value-Added Applications of Supplementary Firing in Gas Turbine Based Co-Generation Plants, ABMA Industrial Boiler Systems Conference, 1997, West Henrietta, New York, USA, http://www.coen.com/i_html/white_suppfire.html
[5] htp://www.rolls-royce.com/energy/energy_products/gas_turbines/rb211/index.jsp
[6] Supplementary Firing Burners, http://www.stork-thermeq.nl/UserFiles/file/PDF/downloads/Supplement_Burner_2007_LR.pdf
[7] Petrone, G., *et al*., Reacting Flows in Industrial Duct-Burners of a Heat Recovery Steam Generator, COMSOL Conference, Hannover, Germany, 2008, http://cds.comsol.com/access/dl/papers/5493/Petrone.pdf
[8] Vanoverberghe, K. P., *et al*., Multiflame Patterns in Swirl-Driven Partially Premixed Natural Gas Combustion, *J. Eng. Gas Turbines Power, 125* (2003), 1, pp. 40-45
[9] Nasr, A. J., Lai, C. S., The Effects of Wall Inclination on an Inclined Offset Jet, www.unsw.adfa.ecu.au/~jcl/research/turbulence/jets/NasrLai.pdf
[10] Chiummo, G., *et al*., Parametrical Analysis on a Exhaust Gas-Methane Burner in Steady-State Conditions: a Post-Combustion Case, www.combustion.org.uk/ECM_2005/Papers/244_Mongiello.pdf
[11] Jayatunga, C., *et al*., Computational Aero-Acoustic Studies of an Exhaust Diffuser, ftp://ftp.rta.nato.int/PubFullText/RTO/MP/RTO-MP-079%28I%29/MP-079%28I%29-%28SYA%29-09.pdf

Paper submitted: March 31, 2010
Paper revised: April 11, 2010
Paper accepted: September 20, 2010